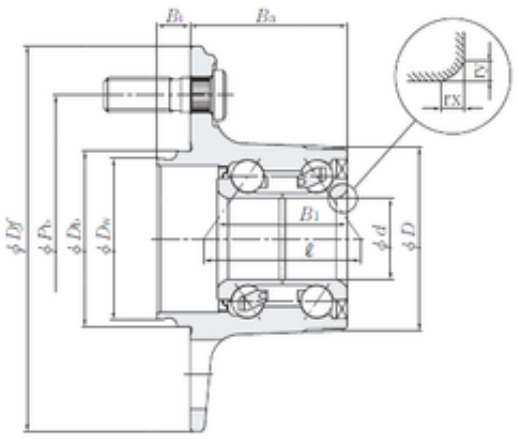

HUB048-35 Bearing 2D drawings and 3D CAD models

NTN HUB048-35 angular contact ball bearings

Bearing No. HUB048-35

Bore Diameter	27 mm
Outer Diameter	63 mm
d	27 mm
D	63 mm
rx	4,5 mm
ry	3,5 mm
Ba	45 mm
Db	61 mm
Df	134 mm
Pb	100 mm
Bi	15 mm
B1	40 mm
Dw	59 mm
ℓ	47,2 Tolerance h14
Weight	1,39 Kg
Basic dynamic load rating (C)	22,3 kN
Basic static load rating (C0)	15,1 kN